Thule RideOn

9502
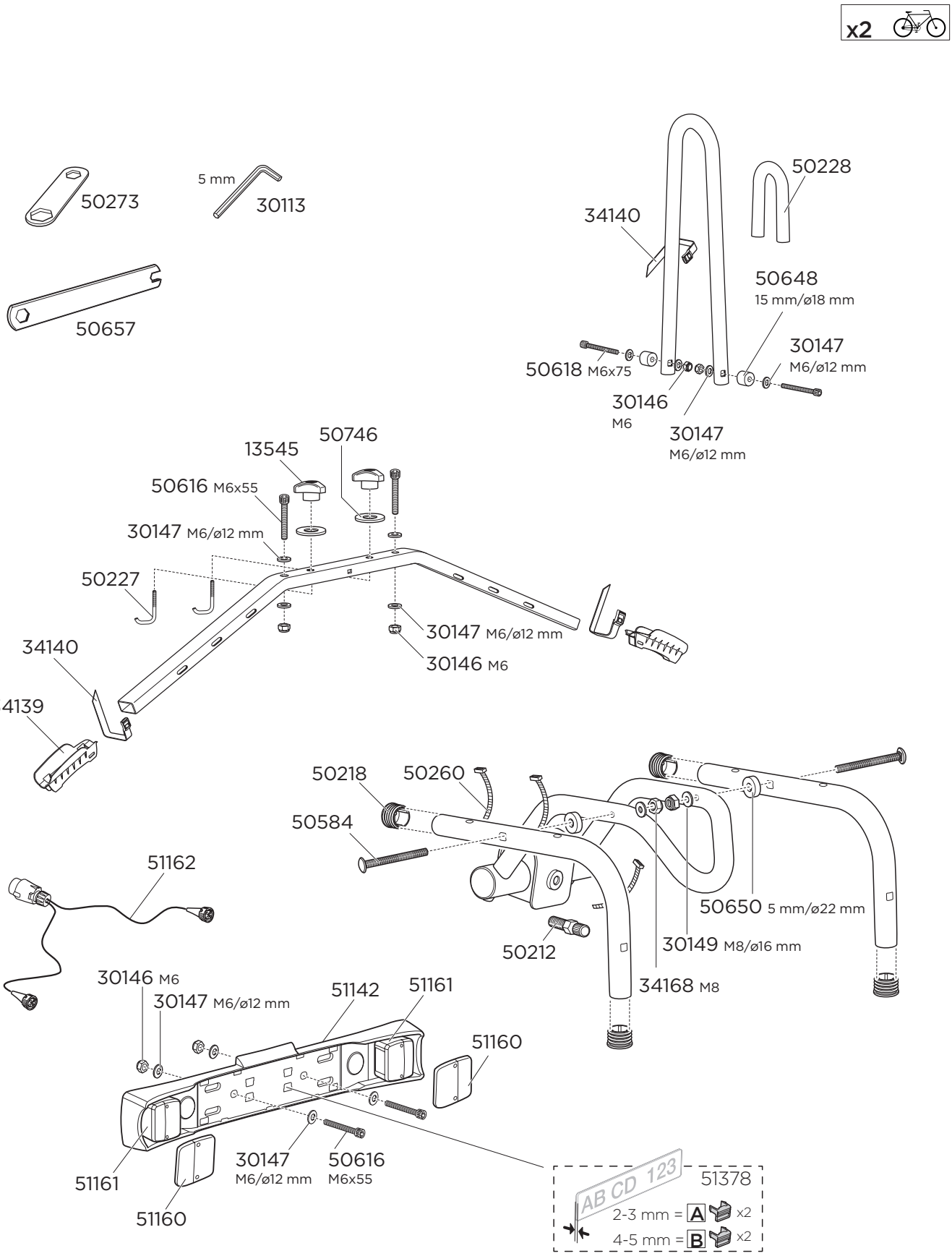
THULE SWEDEN